MODEL
KD135GH-2PU

THE NEW VALUE FRONTIER

KYOCERA

KD135GH-2PU

HIGH EFFICIENCY MULTICRYSTALLINE
PHOTOVOLTAIC MODULE

IEC 61215Ed.2
EN61730

On top of product warranty for surface pressure of 2,400Pa,this module has passed 5,400Pa mechanical load test based on IEC61215 ed.2
This module is manufactured in **ISO9001** certified factories.
Registered No.: JMI0036(Japan), CN07/00321(China), 01 100 528 050018 (Czech Republic),FM26856(Mexico)
TUVdotCOM Internet platform for tested quality and service ID 0000023299.

HIGHLIGHTS OF KYOCERA PHOTOVOLTAIC MODULES

Kyocera's advanced cell processing technology and automated production facilities produce highly efficient multicrystalline photovoltaic modules.
The conversion efficiency of the Kyocera solar cell is over 16%.
These cells are encapsulated between a tempered glass cover and a pottant with back sheet to provide efficient protection from severe environmental conditions.
The entire laminate is installed in an anodized aluminum frame to provide structural strength and ease of installation.
Equipped with plug in connectors.

APPLICATIONS

Grid-Connected Systems

- Residential Solar Power Systems
- Public and Industrial Solar Power Systems

Stand-Alone Solar Power Systems for

- Villages in remote areas
- Homes and summer cottages
- Microwave / Radio repeater stations
- Medical facilities in rural areas
- Emergency communication
- Water quality and environmental data monitoring
- Drinking water and livestock water pumping
- Irrigation pumping
- Cathodic protection
- Aviation obstruction lights
- Environmental data monitoring
- Railway signals
- Street lighting
- Desalination
- etc.

LIMITED WARRANTY

※1 year warranty on material and workmanship
※20 years limited warranty on power output:For detail, please refer to "category IV" in Warranty issued by Kyocera

(Long term output warranty shall warrant if PV Module(s) exhibits power output of less than 90% of the original minimum rated power specified at the time of sale within 10 years and less than 80% within 20 years after the date of sale to the Customer. The power output values shall be those measured under Kyocera's standard measurement conditions. Regarding the warranty conditions in detail, please refer to Warranty issued by Kyocera)

ELECTRICAL CHARACTERISTICS

Current-Voltage characteristics of Photovoltaic Module KD135GH-2PU at various cell temperatures

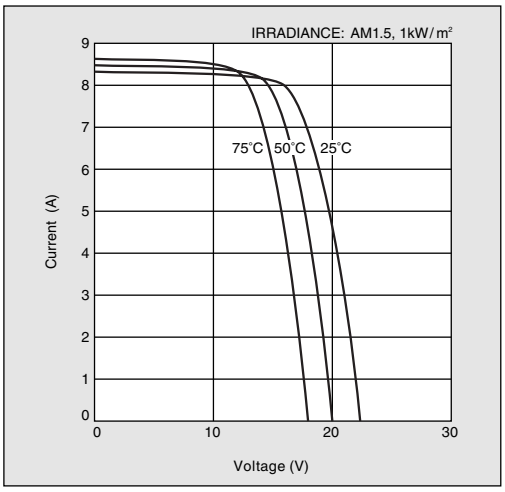

Current-Voltage characteristics of Photovoltaic Module KD135GH-2PU at various irradiance levels at Kyocera Corporation laboratory.

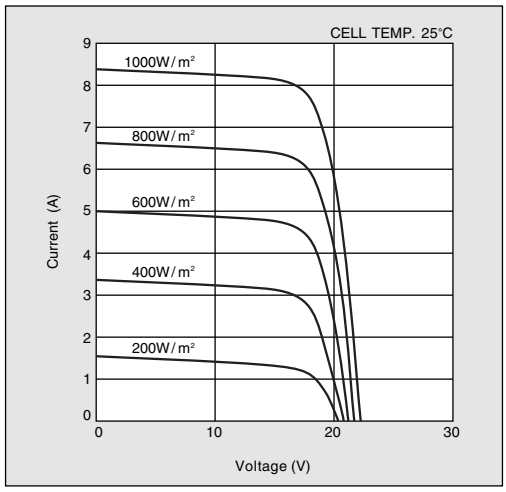

Physical Specifications

(Unit : mm)

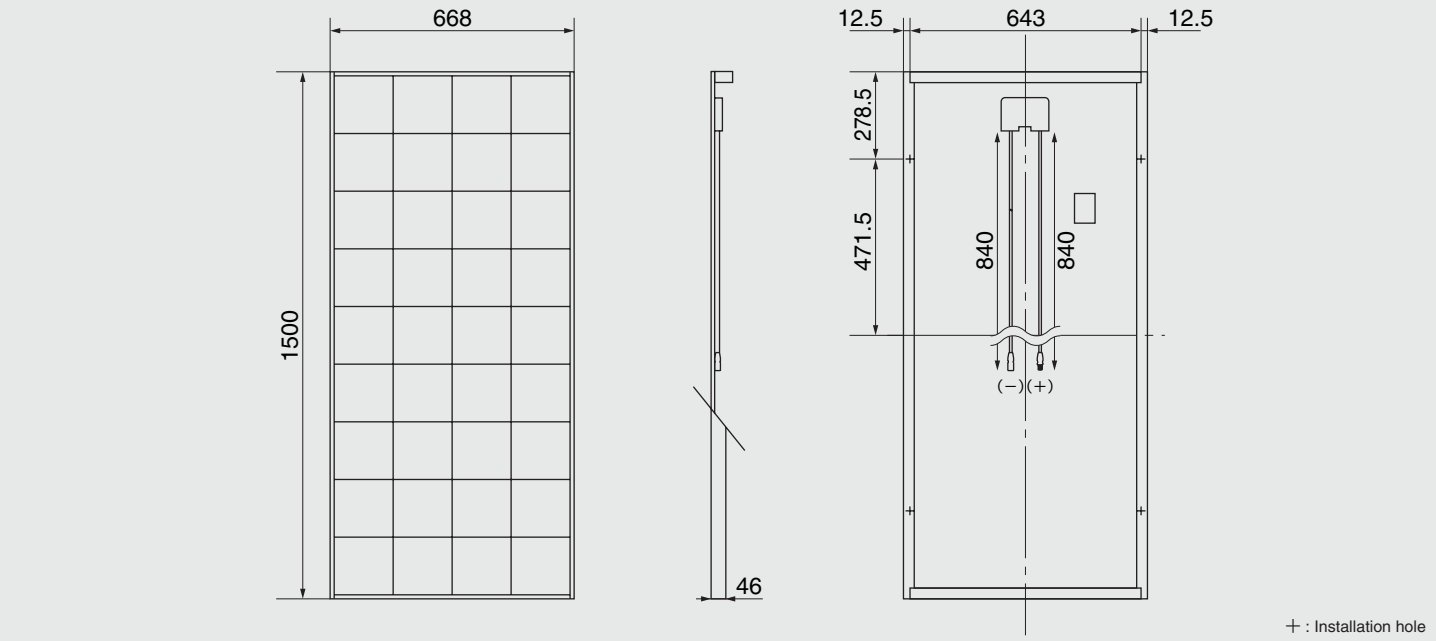

Specifications

Electrical Performance under Standard Test Conditions (*STC)	
Maximum Power (Pmax)	135W (+5%／−5%)
Maximum Power Voltage (Vmpp)	17.7V
Maximum Power Current (Impp)	7.63A
Open Circuit Voltage (Voc)	22.1V
Short Circuit Current (Isc)	8.37A
Max System Voltage	1000V
Temperature Coefficient of Voc	-0.80×10^{-1} V/℃
Temperature Coefficient of Isc	5.02×10^{-3} A/℃

*STC : Irradiance 1000W/m², AM1.5 spectrum, module temperture 25℃

Electrical Performance at 800W/m², *NOCT, AM1.5	
Maximum Power (Pmax)	95W
Maximum Power Voltage (Vmpp)	15.7V
Maximum Power Current (Impp)	6.10A
Open Circuit Voltage (Voc)	20.0V
Short Circuit Current (Isc)	6.79A

*NOCT (Nominal Operating Cell Temperature) : 47.9℃

Cells	
Number per Module	36
Cell Technology	Multicrystalline
Cell Shape	Square

Module Characteristics	
Length × Width × Depth without Box	1500×668×46mm
Weight	12.5kg
Cable	(+)840/(−)840mm

Junction Box Characteristics	
Length × Width × Depth	105×108×20mm
IP Code	IP65

Reduction of Efficiency under Low Irradiance	
*Reduction	5.8%
Limiting Reverse Current	15A

*Reduction of efficiency from an irrandiance of 1000W/m² to 200W/m² (cell temperature 25℃)

Please contact our office for further information

KYOCERA

KYOCERA Corporation

■ KYOCERA Corporation Headquarters
CORPORATE SOLAR ENERGY GROUP
6 Takeda Tobadono-cho
Fushimi-ku, Kyoto
612-8501, Japan
TEL:(81)75-604-3476 FAX:(81)75-604-3475
http://www.kyocera.com/

● KYOCERA Solar, Inc.
7812 East Acoma Drive
Scottsdale, AZ 85260, USA
TEL:(1)480-948-8003 or (800)223-9580 FAX:(1)480-483-6431
http://www.kyocerasolar.com/

● KYOCERA Solar do Brasil Ltda.
Av. Guignard 661, Loja A
22790-200, Recreio dos Bandeirantes, Rio de Janeiro, Brazil
TEL:(55)21-3261-7111 FAX:(55)21-3261-7103
http://www.kyocerasolar.com.br/

● KYOCERA Solar Pty Ltd.
Level 3, 6-10 Talavera Road, North Ryde
N.S.W. 2113, Australia
TEL:(61)2-9870-3946 FAX:(61)2-9888-9673
http://www.kyocerasolar.com.au/

● KYOCERA Fineceramics GmbH
Fritz-Muller-Strasse 27, 73730 Esslingen Germany
TEL:(49)711-93934-999 FAX:(49)711-93934-950
http://www.kyocerasolar.de/
solar@kyocera.de

● KYOCERA Asia Pacific Pte. Ltd.
298 Tiong Bahru Road, #13-03/05
Central Plaza, Singapore 168730
TEL:(65)6271-0500 FAX:(65)6271-0600

● KYOCERA Asia Pacific Ltd.
Room 801-802, Tower 1, South Seas Centre,
75 Mody Road, Tsimshatsui East, Kowloon, Hong Kong
TEL:(852)2723-7183 FAX:(852)2724-4501

● KYOCERA Asia Pacific Pte. Ltd., Taipei Office
10F, No. 66, Nanking West Road, Taipei, Taiwan
TEL:(886) 2-2555-3609 FAX:(886)2-2559-4131

● KYOCERA (Tianjin) Sales & Trading Corp.
(Beijing Office)Room 2107, Beijing Huabin International Building,
No.8 Yong An Dong Li, Jian Guo Men Wai Road, Chao Yang District,
Beijing, 100022, China
TEL:(86)10-8528-8838 FAX:(86)10-8528-8839
http://www.kyocera.com.cn/

● KYOCERA Korea Co., Ltd.
Diplomatic Center Room #406, 1376-1,
Seocho-2Dong, Seocho-Ku,Seoul, 137-072, Korea
TEL:(82)2-3463-3538 FAX:(82)2-3463-3539
http://www.kyocera.co.kr/